Isometric

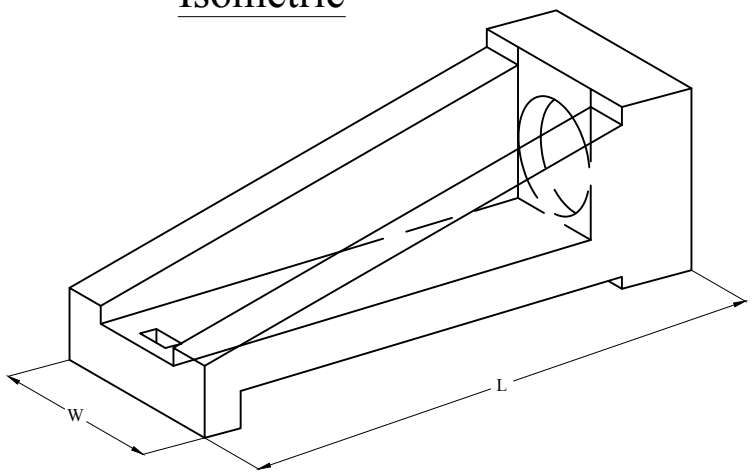

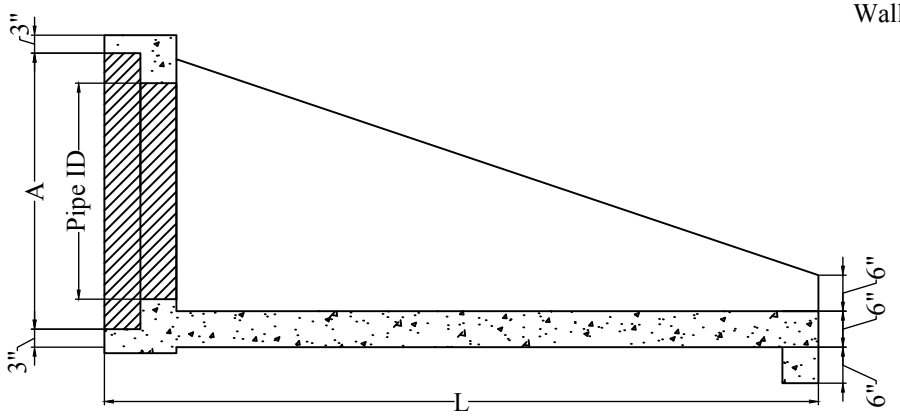

Side Elevation

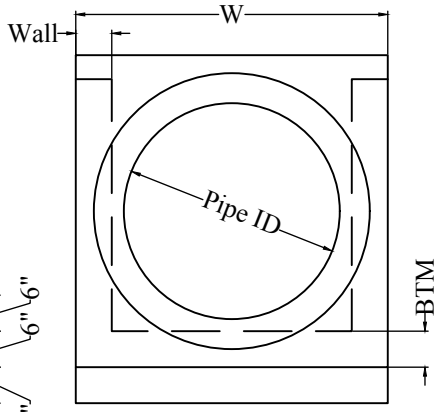

Front Elevation

Pipe I.D.	Slope	Weight	W	L	Wall	BTM	A
12"	3:1	1550 #	27"	43"	5 1/2"	5"	18"
	4:1	1700 #	27"	60"	5 1/2"	5"	18"
	6:1	2327 #	27"	84"	5 1/2"	5"	18"
15"	3:1	1790 #	27"	43"	5 1/2"	5"	20 1/2"
	4:1	2070 #	27"	60"	5 1/2"	5"	20 1/2"
	6:1	2605 #	27"	84"	5 1/2"	5"	20 1/2"
18"	3:1	1800 #	30"	55"	5 1/2"	5"	24"
	4:1	2050 #	30"	69"	5 1/2"	5"	24"
	6:1	2800 #	30"	97"	5 1/2"	5"	24"
21"	3:1	3125 #	35"	81"	5 1/2"	5"	28"
	4:1	3850 #	35"	103"	5 1/2"	5"	28"
	6:1	4975 #	35"	151"	5 1/2"	5"	28"
24"	3:1	3125 #	35"	81"	5 1/2"	5"	31"
	4:1	3850 #	35"	103"	5 1/2"	5"	31"
	6:1	4975 #	35"	151"	5 1/2"	5"	31"
27"	3:1	5225 #	46"	97"	6"	6"	38 1/2"
	4:1	6500 #	46"	125"	6"	6"	38 1/2"
	6:1	9200 #	46"	186"	6"	6"	38 1/2"
30"	3:1	5225 #	46"	97"	6"	6"	38 1/2"
	4:1	6500 #	46"	125"	6"	6"	38 1/2"
	6:1	9200 #	46"	186"	6"	6"	38 1/2"
36"	3:1	7000 #	52"	121"	6"	6"	46"
	4:1	8850 #	52"	154"	6"	6"	46"
	6:1	12500 #	52"	223"	6"	6"	46"
42"	3:1	10875 #	58"	142"	6"	6"	53"
	4:1	13750 #	58"	186"	6"	6"	53"
	6:1	19750 #	58"	276"	6"	6"	53"
48"	3:1	11039 #	66"	158"	7"	6"	60"
	4:1	14673 #	66"	200"	7"	6"	60"
	6:1	21357 #	66"		7"	6"	60"

Notes:
1. Concrete: Design Strength 5,000 PSI @ 28 Days
2. Reinforcement: ASTM A-615, Grade 60 or ASTM A-1064 Welded Wire Fabric
3. H-20 Rated
4. Panel Formed Tolerances +/- 1 $\frac{1}{4}$" For Over All Dimensions & Height

Turner Co.
P.O. Box 885
Rhome, TX 76078

DRAWN BY:	JOB NO:	DATE:	WEIGHT:	Revision Number	
TSH		04/04/23	*Varies*	R0	Sheet 1 of 1

PRODUCT: Standard SET Master

JOB NAME: