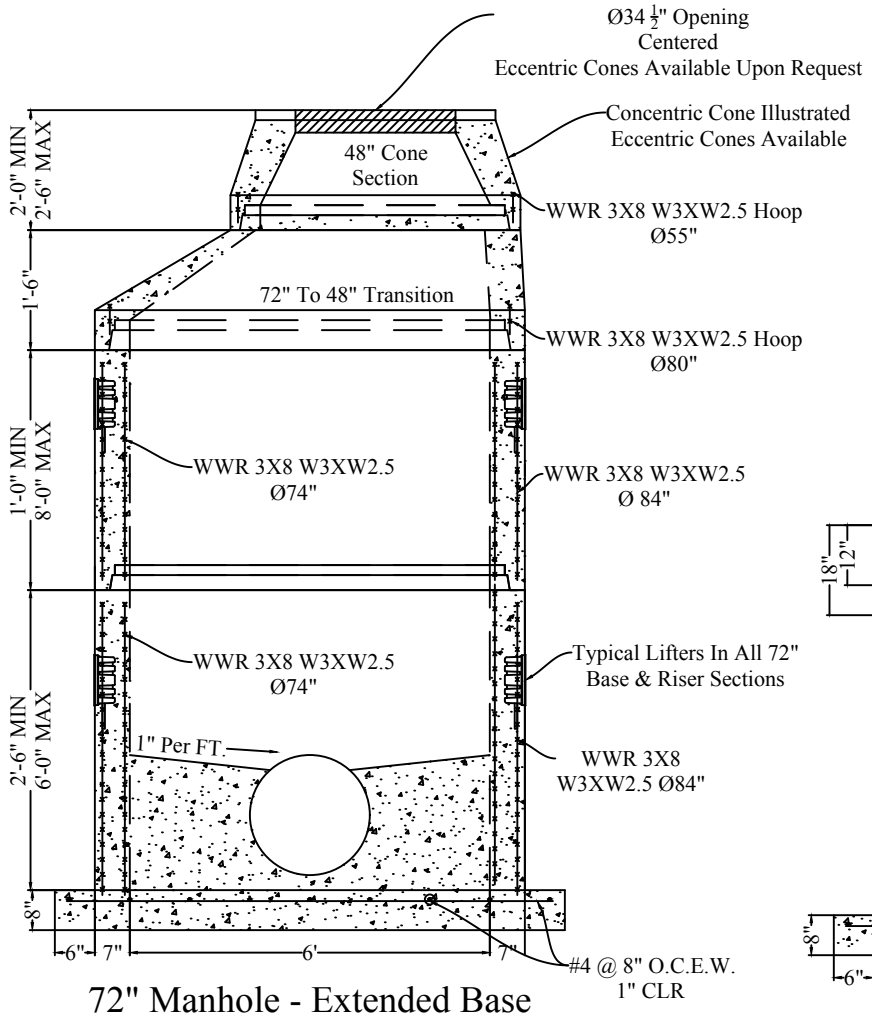

72" Manhole - Extended Base
With Reducing Cone

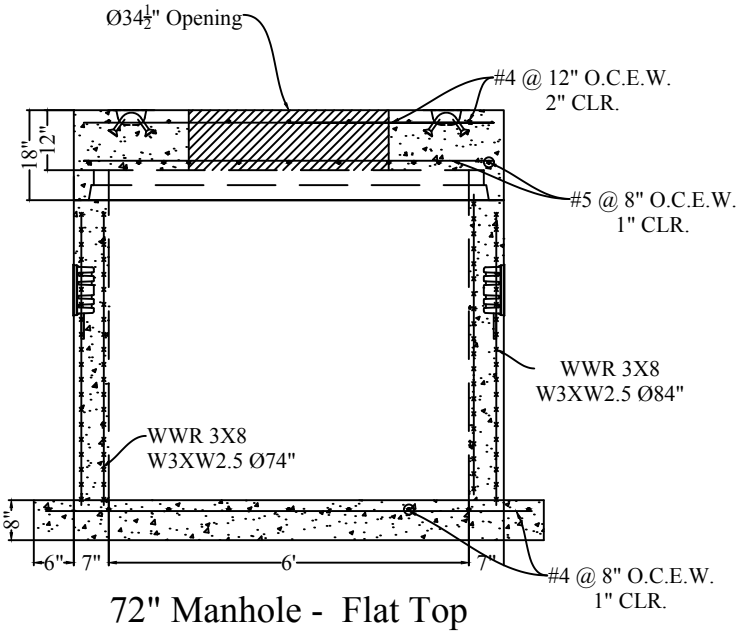

72" Manhole - Flat Top
Illustration

1. Water Tight Gaskets At All Pipe Connections

2. Average Weight of 72" Depth Base
   W/O Inverting 13-033# - Riser
   Weight = 1900#/VTF

3. Manufactured to Your Specifications

4. Invert Depth Shall be Equal To The
   Largest Pipe Diameter

5. Meets Or Exceeds ASTM C478-15

6. Concrete- 5000 PSI @ 28 Days

7. WWR: W3 Wire to Be Circumferential
   W2.5 Wire To Be Vertical Steel

8. Inside Height = 30'-0" MAX

9. 0'-0" - 2'-0" Soil Cover Over Top Slab

10. Concrete: Design Specification 5,000PSI @ 28 Days

11. Reinforcement: ASTM A615, Grade 60
    or ASTM A1064 Welded Wire Reinforcement

Turner Co.
P.O. Box 885
Rhome, TX 76078

DRAWN BY:	JOB NO:	DATE:	WEIGHT:	Revision Number	
TSH		12/08/22	*Varies*	R0	Sheet 1 of 1

PRODUCT: Ø72" Standard Manhole

JOB NAME: