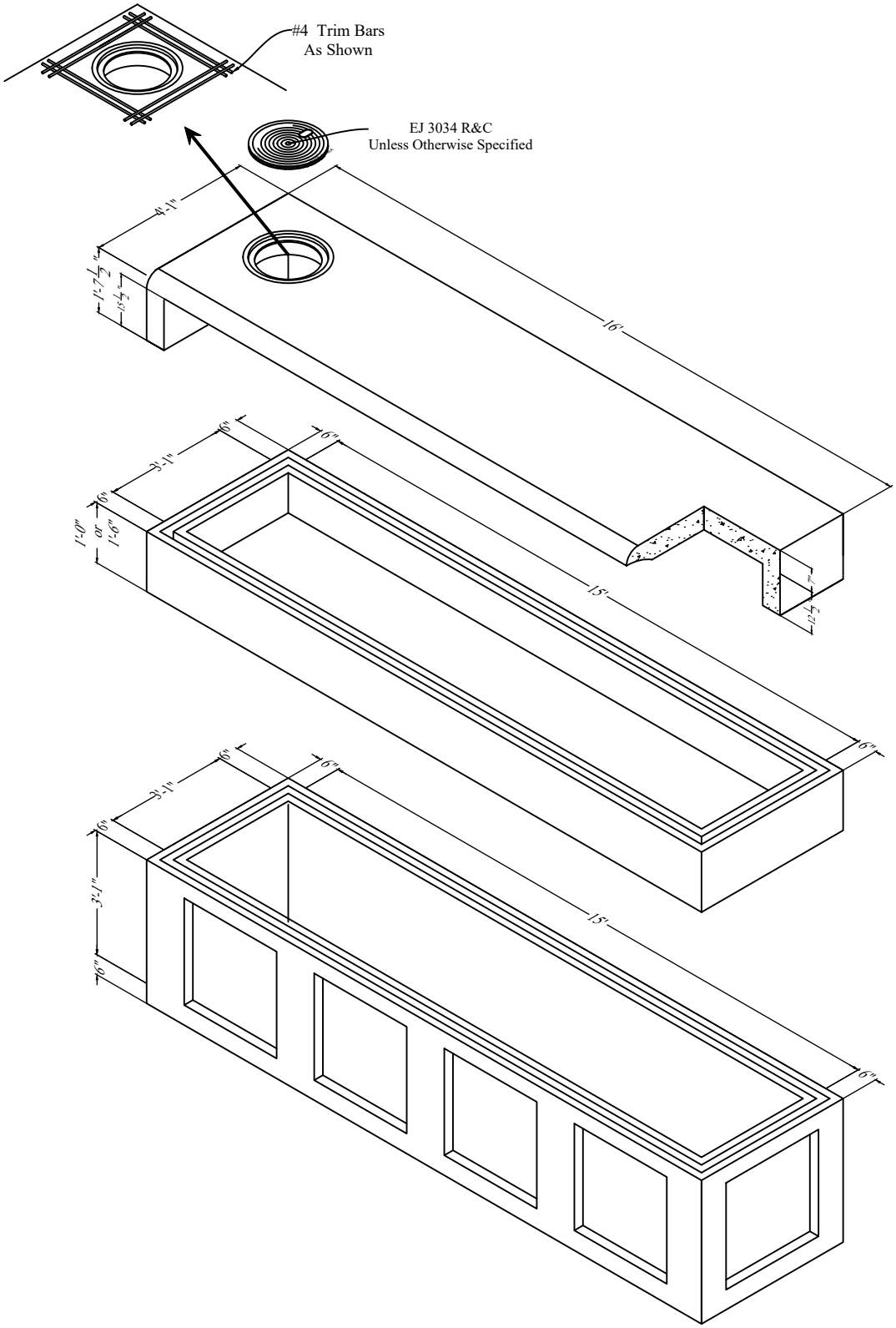

Notes:

1. Concrete: Design Strength 5,000 PSI @ 28 Days
2. Reinforcement: ASTM A-615, Grade 60 or ASTM A-1064 Welded Wire Fabric
3. H-20 Rated
4. Ring & Cover As Required - EJ 3034 Standard Drawing Is For Illustrative Purposes Only And Actual Product May Differ
5. Product Tolerances are in Accordance With ASTM C913, Section 7
6. Rebar Overlap: #4 - 39 $\frac{1}{4}$"
   #5 - 47"
   #6 - 55"
7. Designed Per ASTM C913

Individual Weights		
Base	1'-0" Riser	Top Slab
14300	2850	8000

Turner Co.
P.O. Box 885
Rhome, TX 76078

DRAWN BY:	JOB NO:	DATE:	WEIGHT:	Revision Number	
TSH		08/10/26	*Varies*	R0	Sheet 1 of 1

PRODUCT
15- NTX Standard Curb Inlet

JOB NAME